The Y1 range of thermostats with IP65 enclosures

Rod thermostats (Liquid expansion measurement)

Type	Adjustment	Contact	Measurement	Range °C	Model
Control	Internal	Single pole	Rod	+300 / +4	Y1R Thermostat 8G

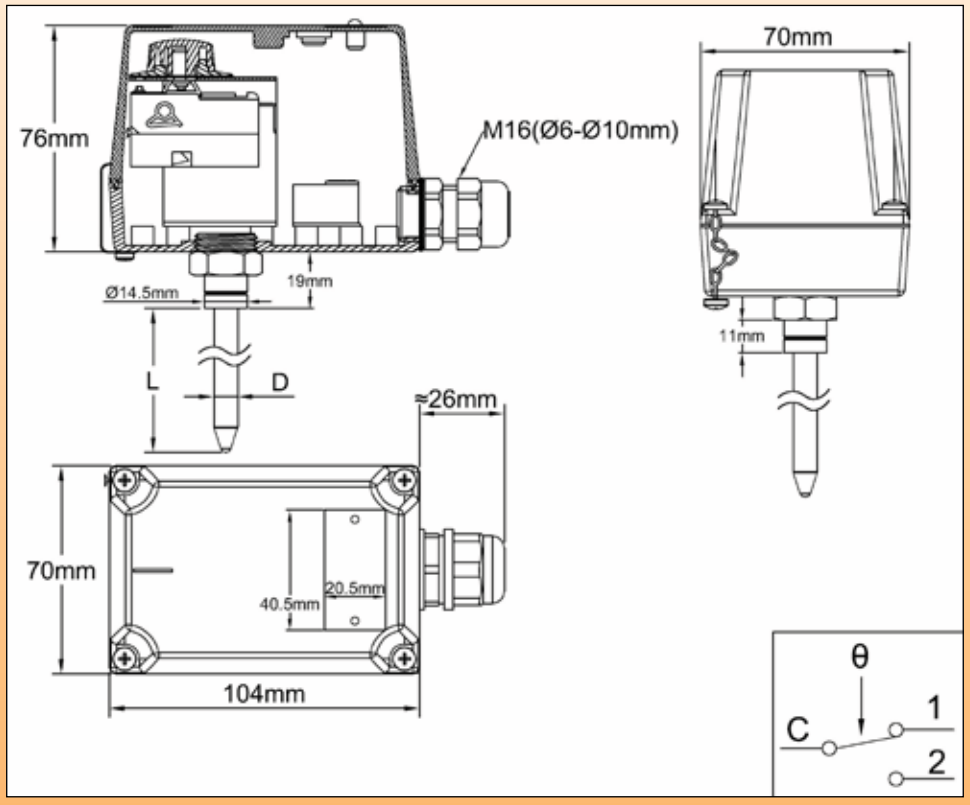

Applications:
These liquid expansion rod thermostats can be installed inside pockets as immersion thermostats in pipelines and containers, and for monitoring temperature in air ducts, in usual industrial application and environment. (Not suitable for hazardous areas).
- Internal adjustment is convenient for products that must not be frequently adjusted.
- Insensibility to strong vibrations

Standard electrical and mechanical life model
Housing: Aluminum,IP65, IK10, 104 x 70 x 76mm. Grey RAL7032 epoxy painting
Set point adjustment ranges: 4-40°C (40-105°F), 30-90°C (85-195°F), 30-110°C (85-230°F), 50-200°C (120-390°F), 50-300°C (120-570°F).
Temperature adjustment: Set point adjustable by temperature printed internal knob. Shipped with °C printed skirt fitted on the knob, and °F printed skirt in spare part. Printed skirt is replaceable without tool.
Action: temperature control.
Sensing element: Liquid expansion rod. This rod has a non-temperature sensing zone named dead zone which allows thermal insulation crossing. An increased diameter under the thermostat head allows mounting pockets or brackets (See pockets in the accessories section)
Electrical connections: on screw terminal connection block
Earthing: on internal screw terminal
Cable output: M16 cable gland, PA66, for cables up to 10 mm dia.
Mounting: on pockets for liquid immersion or flange for air ducts
Identification: 20 x 40 mm stainless steel identification label, riveted.
Contact: SPDT
Electrical rating:
- Open on temperature rise contact (C-1) 16A(2.6) 250VAC
- Closeon temperature rise contact (C-2) 6A(0.6) 250VAC
- Electrical life >100.000 cycles.

Cannot be used in 400VAC
Minimum Storage temperature: -35°C (-30°F)

Main references

Temperature adjustment ranges °C (°F)	References	Differential °C (°F)	Rod length (C, mm)	Rod diameter (D, mm)	Temperature sensing length (E, mm)	Max. temperature on rod °C (°F)
4-40°C (40-105°F)	Y1R8GB004040023C	3±2°C (5.5±3.6 °F)	230	10	140	60°C (140°F)
4-40°C (40-105°F)	Y1R8GB004040030C	3±2°C (5.5±3.6 °F)	300	10	140	60°C (140°F)
30-90°C (85-195°F)	Y1R8GB030090011C	4±3°C (7±5.5 °F)	110	10	87	120°C (250°F)
30-90°C (85-195°F)	Y1R8GB030090023C	4±3°C (7±5.5 °F)	230	10	87	120°C (250°F)
30-90°C (85-195°F)	Y1R8GB030090030C	4±3°C (7±5.5 °F)	300	10	87	120°C (250°F)
30-110°C (85-230°F)	Y1R8GB030110011C	5±3°C (9±5.5 °F)	110	10	83	150°C (300°F)
30-110°C (85-230°F)	Y1R8GB030110023C	5±3°C (9±5.5 °F)	230	10	83	150°C (300°F)
30-110°C (85-230°F)	Y1R8GB030110030C	5±3°C (9±5.5 °F)	300	10	83	150°C (300°F)
50-200°C (120-390°F)	Y1R8GB050200023C	8±5°C (14.5±9 °F)	230	10	59	250°C (480°F)
50-200°C (120-390°F)	Y1R8GB050200030C	8±5°C (14.5±9 °F)	300	10	59	250°C (480°F)
50-200°C (120-390°F)	Y1R8GB050200045C	8±5°C (14.5±9 °F)	450	10	59	250°C (480°F)
50-300°C (120-570°F)	Y1R8GB050300823C	10±5°C (18±9 °F)	230	8	165	350°C (660°F)
50-300°C (120-570°F)	Y1R8GB050300830C	10±5°C (18±9 °F)	300	8	165	350°C (660°F)
50-300°C (120-570°F)	Y1R8GB050300845C	10±5°C (18±9 °F)	450	8	165	350°C (660°F)